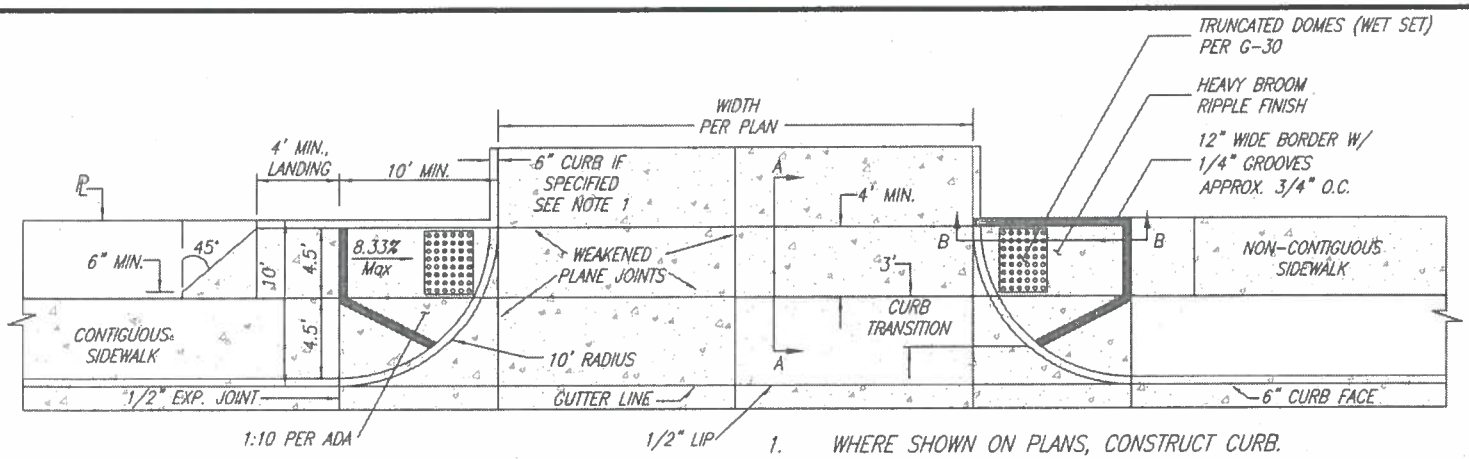

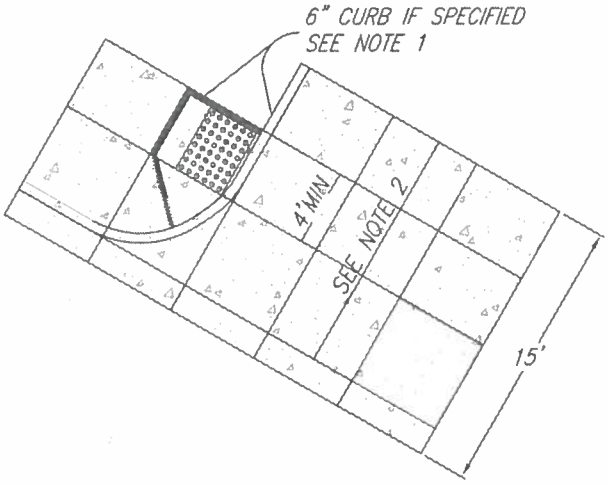

1. WHERE SHOWN ON PLANS, CONSTRUCT CURB.
2. DIMENSIONS MAY VARY TO MAINTAIN A 6% MAX GRADE, 14' MIN.
3. CONCRETE SHALL BE 560-C-3250.
4. APRON BASE MATERIAL SHALL BE CRUSHED AGGREGATE BASE, 6" MIN. THICKNESS.
5. SEE STANDARD DRAWING G-2 FOR CURB & GUTTER.
6. SEE STANDARD DRAWING G-7 FOR SIDEWALK.
7. SEE STANDARD DRAWING G-17 FOR DIMENSIONS AND ELEVATIONS TO BE SHOWN ON PLANS.
8. SEE STANDARD DRAWING G-32A & B FOR GENERAL NOTES.

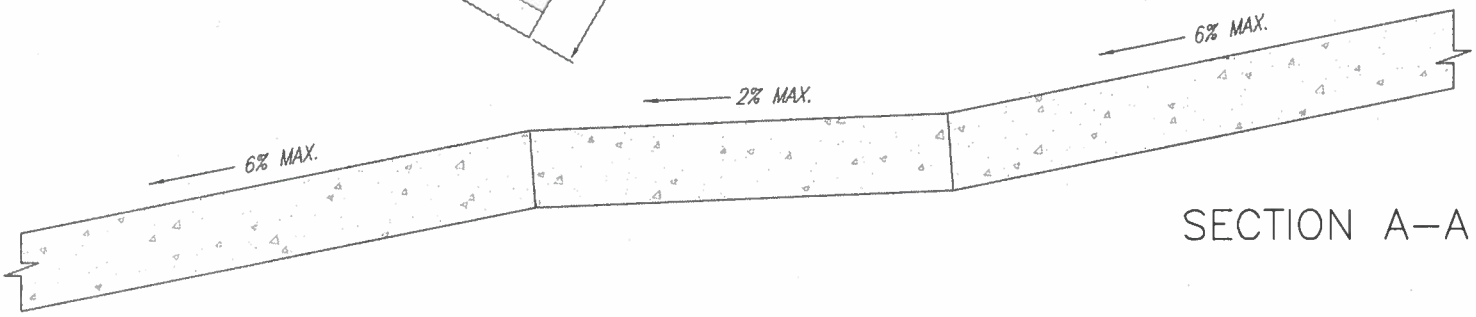

SECTION A-A

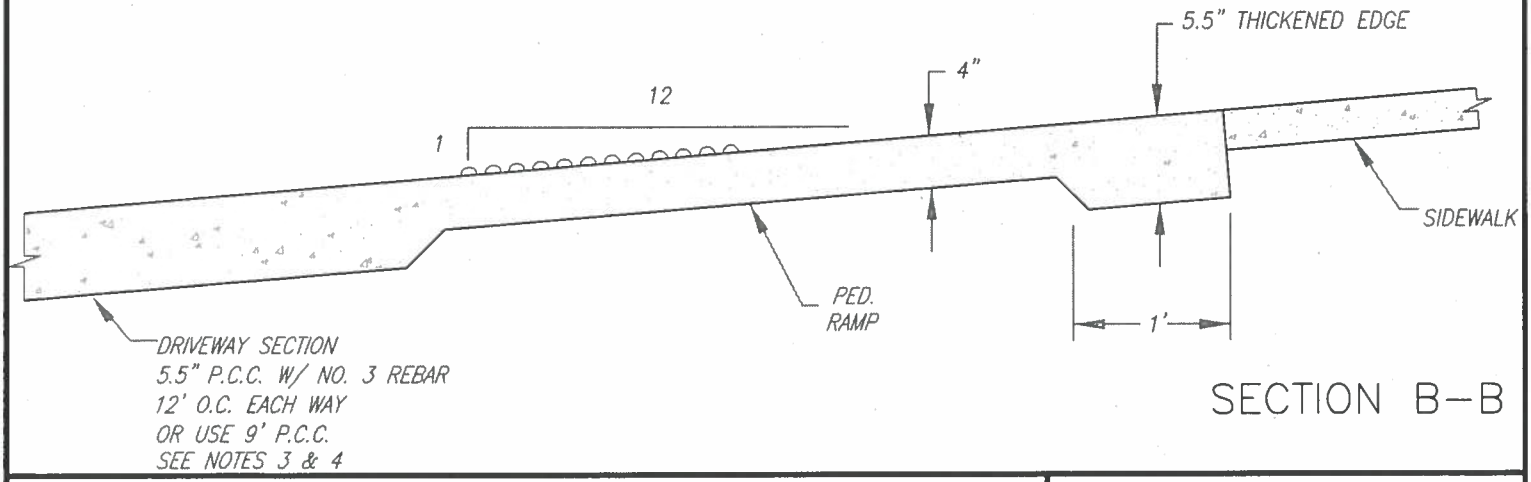

SECTION B-B

CITY OF SANTEE	SUPPLEMENTAL STANDARD NO. G-17M
ALLEY APRON (MODIFIED G-17)	ACCEPTED BY: Scott A Johnson 53347 DEPUTY CITY ENGINEER RCE DATE: 5-27-15