CITY OF SANTEE
DEPARTMENT OF DEVELOPMENT SERVICES
10601 MAGNOLIA AVENUE
SANTEE, CA 92071
258-4100

MOVING PERMIT REGULATIONS

JANUARY 1998

CITY OF SANTEE
DEPARTMENT OF DEVELOPMENT SERVICES
10601 MAGNOLIA AVENUE
SANTEE, CA 92071
258-4100

Regulations Governing Movement of Construction Equipment and Materials

General Requirements

1. All moves shall be made from sunrise to sunset unless otherwise noted on the face of the permit.

2. No moves shall be made on Saturday, Sunday, Holidays, or at night unless authorized on the face of the permit.

3. No moves shall be made between the hours of 7:00 a.m. and 9:00 a.m. or between 4:00 p.m. and 6:00 p.m. over congested roads.

4. Each applicant for a permit shall provide proof of INSURANCE IN FORCE in accordance with Section 15.40.340 of the City Code.

5. All provisions of the Vehicle Code and City Ordinance shall be complied with at all times.

Single Trip Permits

1. An application must contain:

    a. Name and address of mover.

    b. Object(s) to be transported.

    c. Dimensions, height, width, length.

    d. Object weight.

    e. Gross weight.

    f. Composition of hauling equipment.

    g. Maximum axle loads (not to exceed "PURPLE" weight as specified by California Department of Transportation).

    h. Origin, route, destination.

i. Hauling equipment identification.
Make, model, license number.

j. Permit fee is $16.00.

k. Permit issued for one week period.

2. Restrictions

a. Loads exceeding 12'-6" in width require a pilot car; loads in excess of 14'-0" in width require a pilot car fore and aft. Loads over 90'-0" long require 2 pilot cars.

b. Loads exceeding 15'-0" in width or 15'-0" in height require route evaluation. These applications must be submitted to the Department of Development Services at least 8 days prior to the intended move.

c. The Department of Development Services may impose such other restrictions deemed necessary by the specific conditions of the move applied for.

d. Night and Saturday moves will be considered upon request in accordance with the Department of Development Services Regulations covering night and Saturday moves.

Blanket (Annual) Permit:

1. Annual permits will be issued for moving construction equipment under the following conditions:

a. Permit to be issued to a specific truck and trailer combinations, truck cranes, etc. to be identified by year, make, license number, I. D. number, number of axles, number of tires, width of trailer.

b. For construction equipment moved with a truck-trailer combination.

(1) Vehicle and load shall not exceed 13'-6" in width 15'-0" in height and 90'-0" overall length.

(2) Loads with overhang require a pilot vehicle (see diagrams).

c. For truck cranes.

Vehicle shall exceed 11'-0" plus 2" on each side for tire bulge, clearance lights and safety devices required by California Vehicle Code (mirrors may extend on either side as necessary to conform with Section 26709

of the Vehicle Code); height must be legal; length shall not exceed 75'-0" overall not including boom or 80'-0" overall including boom, subject to the restrictions as specified by the California State Department of Transportation. Application for moving a truck crane must be accompanied by a copy of valid State Transportation Permit and/or a copy of weight and inspection report not more than one year old.

d. Proof of Insurance meeting the criteria set for in Section 15.40.340 of the City code.

e. Applicant must be a licensed dealer, transporter, or contractor.

f. Applicant must be a owner of the vehicle of the authorized representative.

g. Permits for "GREEN" loads will be limited to those City roads not posted for a lesser load limit. Permits for "PURPLE" loads will be limited to a specific list of County roads. ("GREEN" and "PURPLE" weights are specified by California State Department of Transportation.)

h. Permits for oversize loads shall be deemed to cover only those roads over which a load of that size can be moved safely.

i. Movements of loads in excess of 12'-6" will REQUIRE a pilot car. Those loads in excess of 14'-0" will require a pilot car fore and aft.

j. Night and Saturday moves will be made in accordance with Department of Development Services regulations covering night and Saturday moves.

k. Permit fee is $90.00 for period not to exceed one year.

(1) If permit is issued for less than one year because of insurance, it can be extend to one year upon proof of insurance.

(2) If the tractor identified on a blanket permit is sold, the permit may be assigned to a new tractor for the remainder of the permit life.

<u>Repetitive Haul Permits</u>:

1. Repetitive haul permit may be issued where multiple units of similar cargo is hauled over the same route. An application can contain:

a. All information required for a single move permit will be required on repetitive permits.

b. Individual tractor and trailers need not be identified if the cargo is unique.

c. Permit fee is the same as a blanket permit, $90.00.

d. Permits shall be issued for a period sufficient to cover hauling operation but must not be longer than one year.

e. Applicant must be a licensed dealer, transporter, or contractor.

f. Applicant must be the owner of the vehicle or the authorized representative.

CITY OF SANTEE
DEPARTMENT OF DEVELOPMENT SERVICES
10601 MAGNOLIA AVENUE
SANTEE, CA 92071
258-4100

Regulations Governing the Movement of Extra-Legal Loads and Escort Vehicles

General Requirements

1. ACCEPTANCE OF PERMIT. The moving of any load or the doing of any work on the highway in accordance with this permit shall be regarded as an acceptance by the Permittee of all terms and conditions of the permit. This permit is effective only between the hours stated on the face of the permit or as may be specified in additional regulations.

   This permit is to be strictly construed and any move other than specifically mentioned on the face of this permit will render this permit null and void.

   The use of this permit is prima facie evidence that the driver has checked the load and/or vehicle and know it to be within the limits as set forth hereon and has verified the routing accuracy.

   This permit is not valid unless signed by an authorized representative of the Department of Development Services.

   This permit is automatically canceled if the move is made by crews or equipment of any organization or individual other than the one named on the face of the permit, or if any alteration or attempted alteration is made upon any portion, section or part of this permit (see Vehicle Code Sec. 27900), or if a reproduced copy of the permit is used.

   Work authorized under this permit is subject to inspection by representatives of the Department of Development Services and costs of such inspection shall be borne by the Permittee.

2. COMPLY WITH APPLICABLE LAWS. This permit is issued pursuant to Section 35780 of the Vehicle Code. Except as specifically provided herein, the requirements of the Vehicle Code and any vehicle registration requirements and other applicable laws must be complied with in all particulars.

3. PERMIT SUBJECT TO INSPECTION. This permit must be carried on the equipment or load at all times while it is being moved within the highway limits. It shall be submitted for inspection on demand of an authorized employee of the Department of Development Services or of any law enforcement officer.

4. FACSIMILE PERMIT. Each Facsimile Permit shall have an authorized signature of a Department of Development Services employee certifying it to be a true copy. A reproduced or altered facsimile permit will not be allowed and shall be automatically canceled.

5. REDUCIBLE LOADS. This permit is issued on the premise that the load described hereon has been loaded in a manner consistent with the California Department of Development Services reducible load policy. This policy does not authorize over legal dimension(s) by loading side by side, by stacking nor by loading end to end. Over legal weight is not authorized if two or more non-related items are transported as a single load. This permit is automatically canceled if any permitted dimension or weight can be reduced to legal limit by repositioning and/or practical removal of a part, portion, or unit therefrom. Trusses as defined by Section 657 of the Vehicle Code are exempt from the repositioning requirement as intended by Section 35708.5 of the Vehicle Code. Items not listed on the permit may be hauled provided they do not increase the dimensions of the vehicle or permitted item and the loaded vehicle is of legal axle and gross weights. Al tampers, rollers, and other compaction equipment ballasted with water, earth or metal must have such ballast removed unless all axle and gross weights do not exceed Vehicle Code legal maximums. Integral components of construction equipment and implements of Husbandry need not be removed providing the overall width does not exceed 14'-0", except the draft arms of a scraper and dozer blades cannot exceed 14'-6".

Limit of Authorization

6. CITY HIGHWAYS. This permit only covers portion of move on City highways under jurisdiction of the Department of Development Services. This permit neither implies nor grants otherwise. City and State permits must be secured for travel on roads and streets under their respective jurisdiction.

7. TRIP LIMIT. Unless specifically stated on the face hereof, this permit is good for only one trip between the points designated.

8. SAFETY. Permittee shall at all times give strict attention to the safety and rights of the traveling public.

9. TRAVELED WAY. The vehicle must be kept to the right of the highway centerline at all times and must stay off shoulders except when entering or leaving the highway or when necessary to allow trailing traffic to pass. On narrow or winding roads, flagmen shall effectively warn and direct traffic. Movement in convoy shall not be permitted unless specified on the face of the permit.

10. BRIDGE STRUCTURES. Extra-legal weight vehicles or loads shall not cross bridge structures simultaneously with other heavily laden vehicles. Before entering upon any bridge structure, the Permittee shall observe approaching

traffic from both directions and should it appear that a second heavily laden vehicle would pass in the opposing lane of traffic or overtake the vehicle, the driver shall pull unit clear of the traveled way and wait until the unregulated load or loads have crossed the bridge structure before entering thereon.

11. PROTECTION ON BRIDGES OR NARROW ROADS. When crossing bridges or on roads so narrow that it is impossible to comply with Regulation 9, a flagman shall be posted ahead of such equipment to warn and direct approaching traffic (see Escort Vehicle Regulations 36 and 37).

12. NIGHT MOVING. Night or weekend moving of extra-legal loads or vehicles will only be permitted when specifically stated on the face of the permit. When night moving is permitted, clearance and side marker lamps must be installed on load at all times and mounted to conform to Section 25100 (c) of the Vehicle Code. Vehicles used for night or weekend moving of permit loads must meet the following requirements:

    a. performance shall be comparable with vehicles moving legal loads.
    b. shall have the ability to maintain normal highway speeds.
    c. shall avoid undue interference with other traffic.

13. MOVING IN FOGGY, RAINY OR WINDY WEATHER. No moving shall be done in foggy, rainy or windy weather when visibility is restricted to less than 1,000 feet except on special authorization. Movement is prohibited when road surfaces are hazardous due to rain, ice, snow or frost or when use of tire chains is mandatory. No moving shall be done when velocity of the wind is such that it causes the vehicle being towed to whip or swerve from side to side or fall to follow substantially in the path of the towing vehicle. Any accident caused by excessive wind conditions shall be considered a prima facie violation of this restriction.

14. PARKING ON HIGHWAY. If necessary to park equipment of load on the highway at night, it shall be moved off the traveled way or pavement so as not to interfere with passing traffic in any way. Warning lights shall be displayed so as to fully protect said traffic. Parking on freeways will be allowed only in case of emergency.

15. NO MOVING DURING HEAVY TRAFFIC. Unless authorized on the face of this permit equipment or load covered by this permit shall not be moved over the highways on Saturdays, Sundays and the following holidays (or any of these holidays falling on a weekend and celebrated on a weekday):

New Year's Day	Labor Day
Washington's Birthday (3rd Monday in Feb.)	Thanksgiving Day
Memorial Day (Last Monday in May)	Christmas Day
Independence Day	

When one of the above listed holidays falls on Monday or Friday, permit movements will not be allowed on a holiday nor the immediately preceding or following weekend, unless authorized on the face of the permit.

Responsibility of Permittee

16. RESPONSIBILITY FOR BRIDGES. This permit does not authorize crossing any posted bridges with gross load exceeding posted limits. Permittee shall comply with all rules posted on any bridges over which are passed and shall assume all risks relative thereto.

17. OVERHEAD CLEARANCE. When height of load exceeds legal limit, it becomes the responsibility of the Permittee to check all underpasses, bridges, overhead wires or other structures for impaired vertical clearance and to bypass or arrange clearance at such locations.

18. REPAIR OF DAMAGE. In accepting this permit, the Permittee agrees to repair at their own expense and to the satisfaction of the Director, any damage to the highway or structures. Work of repair may be done by the Department of Development Services forces at the option of the Director of Development Services, the cost to be borne by the Permittee. In the event of damage to City highway facilities such as bridges, traffic signals, light standards and so forth, a written report must be filed with the Department within 72 hours after such damage has been done. Failure to make this report will be considered cause for cancellation of all permit privileges pending a satisfactory arrangement with the Department for repair or replacement of the damaged facility.

19. LIABILITY FOR DAMAGES. The Permittee is responsible for all liability for injury to or death of any person or damage to property which may occur through any act or omission of either the Permittee or the City of Santee. In the event any claim, suit, or action is brought against the City of Santee, its officer, or employee thereof, by reason of, or in connection with any such act or omission, Permittee shall defend, indemnity, and hold harmless the City, its officers and employees from such claim, suit, or action.

20. OTHER LEGAL LIMITATIONS. All vehicles, utilized as laden or unladen under this permit must conform to legal length, width, and/or overall combination length as defined in the California Vehicle Code, except as specifically stated on the permit. Outriggers may extend to maximum 10'-6" width on legal width vehicles only when laden.

21. AUXILIARY EQUIPMENT. All trailers or dollies being towed by truck cranes, boom trucks, "A" frame units, drill rigs or similar units and/or any transported load on such trailer or dolly must conform to legal length, width and/or weights as defined in the California Vehicle Code unless specifically exempt on the face of the permit.

22. MAXIMUM WEIGHT AND SIZE. The maximum limits for weight and size of vehicles and loads set forth in the Vehicle Code shall not be exceeded except as specifically stated on the face of this permit. Permitted axle weights do not authorize exceeding rated capacity of vehicle tires as specified in 1086 California Administration Code.

23. BOOSTER TYPE AXLES. A booster axle is an axle generally having an air or hydraulic cylinder suspension system that can be actuated independently to assume a portion of the load that would otherwise be carried by adjacent axles. Booster axles and add on or "Joe Dog" axles shall not be used in the movement of permit loads.

24. TRAILERS AND/OR DOLLIES. Not more than two trailers or one trailer and one dolly in combination shall be moved over the highway at any one time behind the towing equipment. Exceptions will be considered if transported item is of an unreducible weight and extra axles are mandatory to achieve weight limitations.

25. REARVIEW MIRRORS. Mirrors on power units must be located so as to reflect to the driver a view of the highway for a distance of at least 200 feet to the rear, but may not exceed 10" beyond the permitted width.

26. TIME RESTRICTIONS. Movement is not allowed between the hours of 7:00 a.m. to 9:00 a.m. nor between 4:00 p.m. to 6:00 p.m. on any City highway within the restricted area shown on attached map. Permit invalid unless map is attached.

27. SIGNS. Unless specifically stated otherwise on the face of the permit, all loads or vehicles being moved on highways under the provisions of Section 35780, exceeding 8'-0" in width, 80'-0" in length, or with more than 10'-0" of overhang must display appropriate warning signs. All signs shall be removed immediately upon completion of the work.

    Signs shall be posted on front and rear and shall read "LONG LOAD" or "OVERSIZE". The "LONG LOAD" sign shall be used whenever overall length exceeds 100 feet. The "OVERSIZE" sign shall be used for shorter lengths and other oversize features. The more definite signs reading "WIDE LOAD", "LONG LOAD", "OVERSIZE LOAD", EXCESSIVE FRONT OVERHANG" or "EXCESSIVE REAR OVERHANG" may be substituted for the "OVERSIZE" sign when appropriate. The "LONG LOAD" sign shall have preference when length exceeds 100'-0" and other oversize features exist. The lettering shall be a 10" minimum height with a 1-5/8" minimum brush stroke, and a minimum 1" all around. All signs shall be black letters on a yellow background, mounted at least 18" above the road surface front and rear. Signs must be neat, clean, legible, mounted securely and visible from straight ahead or behind and to 45° either side thereof.

Trailer Coaches and Building Modules

28. COACHES AND MODULES TOWED ON OWN AXLES

    a. Shall not exceed 6,000 pounds per axle.

    b. Exceeding 11'-6" in width shall have a minimum of 2 axles.

    c. Exceeding 60'-0" in length shall have a minimum of 3 axles.

    d. Units with 2 or more axles shall be equipped with full braking on a minimum of 2 axles.

    e. May exceed 60 feet but may not exceed 65'-0" in length with a minimum of two axles when equipped with 8 x 14.5 mobile home 8-ply or 10-ply rated tires. (Ref. HUD regulations 24 CFR Section 280.904(b)(6).

29. TOWING UNITS. Tractor units towing trailer coaches and modules exceeding 10'-0" in width shall be equipped with dual rear wheels, and shall have an unladen weight as defined in Section 660 of the California Vehicle Code of not less than 6,500 pounds.

30. OPEN SIDE COVERING. Open sided units shall be covered by plywood, hard board or other rigid material. In lieu or rigid material, suitable plastics, or other flexible material may be used. Billowing or flapping of plastic or flexible side covering in excess of 6" in any one place will not be permitted.

Tow Truck

31. LENGTH. The length of tow truck and tow bar added to a legal vehicle or combination of vehicles is permitted within the radius specified on the permit. (See Vehicle Code 25780.)

32. DANGEROUS CARGO.

    a. A disabled vehicle or vehicle combination containing a flammable or corrosive cargo, or poison gas may be towed without length limitation to the nearest petroleum distribution center, truck service stop, or destination, if closer.

    b. A disabled vehicle or vehicle combination containing or carrying explosives may be towed without length limitations only over approved routes and only to an approved safe parking spot as authorized by the California Highway Patrol for this type of cargo, or to destination, if closer.

33. LEGAL SIZE. Any disabled vehicle or vehicles, including load, to be towed shall be of legal size and weight (see Regulation 35 for exceptions).

34. UNRESTRICTED MOVEMENT. Unrestricted day and night movements, including Saturdays, Sundays and holidays, are authorized provided that only essential minimum distances (point of breakdown to nearest off-ramp) are traveled in metropolitan areas between the hours of 7:00 a.m. to 9:00 a.m. and 4:00 p.m. to 6:00 p.m. as shown on the attached Restricted Hours map.

35. TOWING PERMIT LOADS AND/OR VEHICLES.

a. Disabled oversize and/or overweight vehicles, if covered by a valid Transportation permit issued by the Department of Development Services, may be towed on the City highways authorized by that transportation permit but only to the closest freeway off-ramp, city street, or truck service stop.

b. Any disabled vehicle or combination of vehicles which because of damage has incurred distortion in width or height hereby causing an excess in legal dimensions or the dimensions authorized by a Transportation permit adhere to the following provisions:

(1) When such damage occurs on the City highway other than a freeway, the disabled vehicle or combination shall be towed either to the nearest City street over which travel can be continued by other permits or towed to the nearest parking spot until a "single trip" permit can be obtained covering the existing oversize dimensions to further travel.

(2) When such damage occurs on any full freeway, the vehicle or combination may be towed to the nearest off-ramp of the City street over which travel can be continued by other permits. Any such width over 12'-0" will require a front and rear pilot car as escort for any distance over one-half mile.

Escort Vehicle and Flagging

36. PERMITTEE'S RESPONSIBILITY FOR PROPER PILOTING AND FLAGGING PROCEDURES. It shall be the responsibility of the Permittee to ensure that pilot car vehicles, operators, and/or flagmen employed carry out the provisions of this permit, and all personnel are properly equipped and briefed as to their responsibilities prior to the movement. Failure of pilot car operators and flagmen to comply with these provisions in properly warning and directing traffic is considered a violation of the terms of this permit.

37. FLAGMAN. When necessary to post a flagman or flagmen in order to warn and direct approaching traffic, each flagman must be wearing a red jacket or vest and equipped with a red flag and paddle reading "STOP" in white letters with red background. Flagmen shall not be less than 18 years of age and capable of carrying out flagging responsibilities.

38. PILOT CARS. Pilot cars when specified on the face of the permit shall be furnished by the Permittee.

When one pilot car is required it shall precede on two or three lane conventional roads or follow on four or more lane divided roads. When two pilot cars are required one shall precede and one shall follow piloted load or vehicle. Exceptions to these provisions are to be specifically stated on the face of the permit. The permit may require additional pilot cars.

Pilot cars and permit move shall remain right of the centerline of the roadway at all times except when prevented by the physical limitations of the highway. The use of a pilot car does not grant to the Permittee the right to pre-empt the opposing traffic lane. When it becomes necessary because of physical limitations of the highway to use a portion of the opposing traffic lane the permit move shall not occupy that lane until it has been advised by the pilot car that the lane is clear of all on-coming traffic. Opposing traffic is not to be stopped, except in extreme emergencies. It shall be the responsibility of the permit move to stop safely and wait until the opposing lane is free of traffic before proceeding.

Pilot cars shall also comply with provisions of Section 21650 of the Vehicle Code with regard to driving upon the right side of the roadway.

Pilot cars shall not be used to tow another vehicle while being utilized as a pilot car.

Convoying, or using one pilot car for more than one extra-legal load, will not be permitted unless specifically authorized on the face of the permit.

All vehicles or loads exceeding 12'-0" in width, or the lane width will require a pilot car and those exceeding 14'-0" in width shall have a pilot car, both front and rear. In some areas a pilot car will be required for loads of lesser width or additional pilot cars will be called for depending on the character of the road and the traffic volume. For example, pilot cars may be specified for loads or vehicles exceeding 10'-0" in width on two-lane roads traversing mountain areas.

All loads exceeding 25'-0" front/rear overhang measured from the last visible means of support will require a pilot car.

All mobile vehicles, the boom rear overhang exceeding 25'-0" measured from the center of the rear most axle of the vehicle, boom dolly, or boom trailer, or

with boom front overhang exceeding 25'-0" measured from the front of the front tire of the vehicle, will require a pilot car if so stated on the face of the permit.

Pilot cars will also be required for loads where any part of the vehicle or load will be expected to encroach on opposing traffic lanes due to alignment, lane width, traffic density, etc., or if assistance is needed at on or off ramps in interchange areas.

The interval to be maintained between pilot car(s) and the escorted load or vehicles shall provide the maximum warning to other traffic. The interval shall provide the maximum warning to other traffic. The interval shall also be adequate to allow traffic to pass each vehicle separately where possible.

Pilot car shall be in accordance with the following requirements:

a. SIZE. Minimum: 60" in width. Maximum: 1-1/2 ton truck.

b. LIGHTS. Display top mounted flashing or totaling amber light(s), which must be operated at all times while escorting a load unless otherwise specified on the face of the permit. Lights shall be visible to the front when leading, and to the rear when following. Lights must be a type as listed on the California Highway Patrol list of approved lighting devices.

c. SIGNS. Display a top-mounted sign with minimum height of the bottom of the sign 48" above the roadway. The sign shall contain the message "OVERSIZE LOAD AHEAD/FOLLOWING", as appropriate. The more definitive signs reading "OVERSIZE LOAD AHEAD/FOLLOWING", "WIDE LOAD AHEAD/FOLLOWING", or "LONG LOAD AHEAD/FOLLOWING" may be substituted for the "OVERSIZE LOAD AHEAD/ FOLLOWING" sign when appropriate. The sign shall be printed with 5" minimum height black letters on a yellow background, using a minimum 1" brush stroke. Signs must not be displayed when not escorting a load.

d. RADIO. Two-way radio communications between pilot cars and transporting vehicles will be required where the vehicle and/or load encroaches into opposing lanes of travel due to lane widths, highway alignment, side clearance restrictions, length and/or width of load, etc. when specified on the face of the permit.

e. RED FLAGS. Each pilot vehicle shall be equipped with (1) slow/stop hand paddle, (2) red hand flag, (3) red vest of jacket. These items are to be utilized by the pilot car operator in the event it becomes necessary to park the pilot car and stop or control highway traffic. Flagging procedures shall be in accordance with state's pamphlet entitled "Instructions to Flagmen". At no time will the slow/stop hand paddle be displayed out of the window of a moving vehicle.

Route Evaluation

Any load exceeding 110'-0" length, 15'-0" in width and 16'-0" in height is subject to a route evaluation and inspection by Department of Development Services personnel. Arrangements must be made eight (8) calendar days prior to the move.

Regulations Governing Movement of Mobile Homes

General Requirements

1. All moves shall be made from sunrise to sunset unless otherwise noted on the face of the permit.

2. No moves shall be made on Saturdays, Sundays, Holidays or at night unless authorized on the face of the permit.

3. No moves shall be made between the hours of 7:00 a.m. and 9:00 a.m. or between 4:00 p.m. and 6:00 p.m. over congested roads.

4. Each applicant for a permit shall provide proof of insurance in Force in accordance with Section 15.40.3.40 of the Municipal Code.

5. All provisions of the Vehicle Code and Municipal Ordinance shall be complied with at all times.

6. Loads in excess of 12'-6" will require a pilot car and the loads in excess of 14'-0" will require a pilot car fore and aft.

Single Trip Permits

1. Name and address of mover.

2. Make and serial number of coach.

3. Dimensions of load, including width and length.

4. Point of origin, routing and destination.

5. Maximum axle loading.

6. Single trip permits will be good for calendar days.

Permit fee for single trip permit is $16.00

Blanket (Annual) Permit.

Annual permits will be issued for towing mobile homes under the following conditions:

1. The towing vehicle will be identified on permit.

2. Power units to tow loads having a gross weight of more than 18,000 pounds shall be a 1-1/2 ton vehicle or larger, equipped with dual wheels.

3. Vehicle shall be identified by make, year, license number and I.D. number.

4. Vehicle and mobile home combination shall not exceed 13'-6" in width, 15'-0" height and 90'-0" in length.

5. Applicant must be a licensed manufacturer, dealer or transporter.

6. Applicants must be the owner of the vehicle or the appointed authorized representative.

Permit fee is $90.00 for a period not to exceed one year.

1. If the permit is issued for less than one year because of insurance, it can be extended to one year upon proof of issuance.

2. If the tractor identified on an annual blanket permit is sold the permit may be assigned to a new tractor for the remainder of the year.

VERTICAL AND HORIZONTAL CLEARANCE FOR THE MOVEMENT OF OVERSIZED LOADS ON VARIOUS CITY ROADS

The areas where there would be some height restrictions would be at signalized intersections. The minimum allowable vertical clearance for any obstruction hanging from a signal arm is 15'-0". Therefore, if the vertical dimension of the load exceeds 15'-0", it should either be rerouted or provisions should be made to allow the load to travel against traffic through the signalized intersection as required.

The following is a list of street intersections along some of the major hauling routes which are equipped with traffic signals.

1. Mast Boulevard at Carlton Hills Boulevard
2. Mast Boulevard at Magnolia Avenue
3. Mission Gorge Road at West Hills Parkway
4. Mission Gorge Road at Rancho Fanita Drive
5. Mission Gorge Road at Big Rock Road
6. Mission Gorge Road at Mesa Road
7. Mission Gorge Road at Highway 52
8. Mission Gorge Road at Fanita Drive
9. Mission Gorge Road at Carlton Hills Boulevard
10. Mission Gorge Road at Town Center Parkway
11. Mission Gorge Road at Cuyamaca Street
12. Mission Gorge Road at Cottonwood Avenue
13. Mission Gorge Road at Edgemoor Drive
14. Mission Gorge Road/Woodside Avenue at Magnolia Avenue
15. Prospect Avenue at Cuyamaca Street
16. Prospect Avenue at Magnolia Avenue
17. Prospect Avenue at Highway 67 Ramp

Of all signalized intersections covered, only Mission Gorge Road and Carlton Hills Boulevard (1-30-80) have had damage of the sort that required realignment of the light box (damage caused by a sideswipe action).

Attached is a list of the intersections with the vertical and horizontal restrictions and other pertinent information along these routes.

Mission Gorge Road at West Hills Parkway

Vertical clearance Westbound 20 feet
Vertical clearance Eastbound 19 feet

Mission Gorge Road at Rancho Fanita Dr

Vertical clearance Eastbound 18.8 feet

Mission Gorge Road at Big Rock Road

Vertical clearance Westbound 20 feet
Vertical clearance Eastbound 20 feet

Mission Gorge Road at Mesa Road

Vertical clearance Eastbound 21 feet

Mission Gorge Road at Highway 52 Overpass

Vertical clearance Eastbound 19 feet

Mission Gorge Road at Fanita Drive

Vertical clearance Westbound 20 feet
Vertical clearance Eastbound 20 feet

There is a raised median on the east side of the intersection reducing horizontal clearance to 45 feet westbound and 32 feet eastbound.

Mission Gorge Road at Carlton Hills Boulevard

Vertical clearance Westbound 16.5 feet
Vertical clearance Eastbound 19 feet

Maximum horizontal clearance is 43 feet to miss raised medians and signs thereon.

Mission Gorge Road at Cuyamaca Street

Vertical clearance Westbound 20 feet
Vertical clearance Eastbound 19.5 feet
Vertical clearance Northbound 21 feet
Vertical clearance Southbound 19 feet

Due to islands on the East side of the intersection horizontal loads should be no wider that 40 feet.

Mission Gorge Road at Edgemoor Drive

Vertical clearance Westbound 21 feet
Vertical clearance Eastbound 20.5 feet

Mission Gorge Road/Woodside Avenue at Magnolia Avenue

Vertical clearance Northbound 20 feet
Vertical clearance Southbound 20 feet
Vertical clearance Eastbound 20 feet
Vertical clearance Westbound 20 feet

Prospect Avenue at Cuyamaca Street

Vertical clearance Westbound 20 feet
Vertical clearance Eastbound 20 feet
Vertical clearance Northbound 19 feet
Vertical clearance Southbound 18 feet

Prospect Avenue at Magnolia Avenue

Vertical clearance Westbound 19.5 feet
Vertical clearance Eastbound 20 feet
Vertical clearance Northbound 19.5 feet
Vertical clearance Southbound 19 feet

Prospect Avenue at Northbound Highway 67 Off-ramp

Vertical clearance Westbound 20 feet
Vertical clearance Eastbound 20 feet

Woodside Avenue at Highway 67 Overpass

Minimum passable clearance vertically 16.5 feet

SHEET NUMBER_____

Minimum Requirements for Loads to be Moved at Night and on Saturdays.

Rider

To made a part of Permit No. _____ Date _____

1. Night and Saturday moves are authorized only when shown on the face of the moving permit. Blanket permits for night moves will not be authorized for loads sin excess of: Height 14'-0", Width 12'-0", Length 90'-0".

2. Any requests for night or Saturday moves involving equipment in excess of the above dimensions will be considered on a single even permit basis.

3. Any load moved during night-time hours shall meet all requirements of this permit, State and County regulations and shall be properly lighted with warning lights and signs as may be required by law or ordinance.

SHEET NUMBER _____

NIGHT MOVE
MINIMUM LIGHTING REQUIREMENTS FOR EACH UNIT

1. Steadily burning amber lights at outer extremities, and all protrusions, and at 5'-0" intervals completely around structure except the lights in the rear may be red. Maximum heights above ground is 5'-0".

2 A minimum of the following high intensity amber electric lights must be in operation. These lights must be at least 4" in diameter.

   Approximate height above ground is 8'-0".

   Left front and Right rear - 2 lights (one blinker and one steady or both blinking)

   Right front and Left rear - 1 light blinker or steady

3. White flood light projecting from the towing truck to flood entire front of each unit 15'-0" or wider, adjusting so that lights will not project beyond maximum width of the unit.

4. Lighting on <u>EACH UNIT</u> being moved shall meet these requirements.

5. These requirements may be modified and/or additional requirements may be requested by the Department of Development Services.

s:joann\traffic\permit.spc
a:Traffic Signal Prop\Permit.spc

CITY ROADS AS LISTED FOR "PURPLE" LOADING ON BLANKET MOVING PERMITS

**FANITA DRIVE from El Cajon City Limits to Mission Gorge Road

**GRAVES AVENUE from El Cajon City Limits to Prospect Avenue

**MAGNOLIA AVENUE from El Cajon City Limits to Len Street

**MISSION GORGE ROAD from San Diego City Limits to Woodside Avenue (all portions).

WOODSIDE AVENUE from Magnolia Avenue to Easterly City Limits

**WOODSIDE AVENUE NORTH from Woodside Avenue to Riverford Road

** indicates that "night moving" is allowed (for truck cranes only).

PLATE 25-4

GREEN AND BONUS OVERLOADS*

Example: 8'-0" Distance Between First and Last Axle in Feet

43,680	4 tires, 8'-0" Wide	Green Load = 1.3 x 700 (L + 40)
50,232	8 tires, 8'-0" Wide	Green Load (+ 15%) = 1.15 x 1.3 x 700 (L + 40)
54,600	8 tires, 10'-0" Wide	Green Load (+ 25%) = 1.25 x 1.3 x 700 (L + 40)

FT. \ IN.	0	1	2	3	4	5	6	7	8	9	10	11
2	24,000 27,600 30,000	24,000 27,600 30,000	24,000 27,600 30,000	24,000 27,600 30,000	24,000 27,600 30,000	24,000 27,600 30,000	24,000 27,600 30,000	24,000 27,600 30,000	24,000 27,600 30,000	24,000 27,600 30,000	24,000 27,600 30,000	24,000 27,600 30,000
3	24,000 27,600 30,000	24,000 27,600 30,000	24,000 27,600 30,000	24,000 27,600 30,000	24,000 27,600 30,000	24,000 27,600 30,000	39,585 45,523 49,481	39,661 45,610 49,576	39,737 45,698 49,671	39,812 45,784 49,766	39,888 45,871 49,860	39,964 45,959 49,956
4	40,040 46,046 50,050	40,116 46,133 50,144	40,192 46,221 50,240	40,267 46,308 50,334	40,343 46,394 50,429	40,419 46,482 50,524	40,495 46,569 50,619	40,571 46,656 50,713	40,647 46,744 50,809	40,722 46,831 50,903	40,798 46,918 50,998	40,874 47,006 51,093
5	40,950 47,092 51,187	41,026 47,179 51,282	41,102 47,267 51,377	41,177 47,354 51,472	41,253 47,441 51,566	41,329 47,529 51,662	41,405 47,616 51,756	41,481 47,703 51,851	41,557 47,791 51,946	41,632 47,877 52,041	41,708 47,964 52,135	41,784 48,052 52,231
6	41,860 48,139 52,325	41,936 48,226 52,419	42,012 48,314 52,515	42,087 48,401 52,609	42,163 48,487 52,704	42,239 48,575 52,799	42,315 48,662 52,894	42,391 48,749 52,988	42,467 48,837 53,084	42,542 48,924 53,178	42,618 49,011 53,273	42,694 49,099 53,368
7	42,770 49,185 53,462	42,846 49,272 53,557	42,922 49,360 53,652	42,997 49,447 53,747	43,073 49,534 53,841	43,149 49,622 53,937	43,225 49,709 54,031	43,301 49,796 54,126	43,377 49,884 54,221	43,452 49,970 54,316	43,528 50,057 54,410	43,604 50,145 54,506
8	43,680 50,232 54,600	43,756 50,319 54,694	43,382 50,407 54,790	43,907 50,494 54,884	43,983 50,580 54,979	44,059 50,669 55,074	44,135 50,755 55,169	44,211 50,842 55,263	44,287 50,930 55,359	44,362 51,017 55,453	44,438 51,104 55,548	44,514 51,192 55,643
9	44,590 51,278 55,737	44,666 51,365 55,832	44,742 51,453 55,927	44,817 51,540 56,022	44,893 51,627 56,116	44,969 51,715 56,212	45,045 51,802 56,306	45,121 51,889 56,401	45,197 51,977 56,496	45,272 52,063 56,591	45,348 52,150 56,685	45,424 52,238 56,781
10	45,500 52,325 56,875	45,576 52,412 56,969	45,652 52,500 57,065	45,727 52,587 57,159	45,803 52,673 57,254	45,879 52,761 57,349	45,955 52,848 57,444	46,031 52,935 57,538	46,107 53,028 57,639	46,182 53,110 57,728	46,258 53,197 57,823	46,334 53,285 57,918
11	46,410 53,371 58,012	46,486 53,458 58,107	46,562 53,546 58,202	46,638 53,634 58,298	46,713 53,715 58,386	46,789 53,808 58,487	46,865 53,895 58,581	46,941 53,982 58,676	47,017 54,070 58,771	47,092 54,156 58,866	47,168 54,243 58,960	47,244 54,331 59,056
12	47,320 54,418 59,150	47,396 54,505 59,244	47,472 54,593 59,340	47,547 54,680 59,434	47,623 54,766 59,529	47,699 54,854 59,624	47,775 54,941 59,719	47,851 55,028 59,813	47,927 55,116 59,909	48,002 55,203 60,003	48,078 55,290 60,098	48,154 55,378 60,193
13	48,230 55,464 60,287	48,306 55,551 60,382	48,382 55,639 60,477	48,457 55,726 60,572	48,533 55,913 60,666	48,609 55,901 60,762	48,685 55,988 60,856	48,761 56,075 60,951	48,837 56,163 61,046	48,912 56,249 61,141	48,988 56,336 61,235	49,064 56,424 61,331
14	49,140 56,511 61,425	49,216 56,598 61,519	49,292 56,686 61,615	49,367 56,773 61,709	49,443 56,859 61,804	49,519 56,947 61,899	49,595 57,034 61,994	49,671 57,121 62,088	49,747 57,209 62,184	49,822 57,296 62,278	49,898 57,383 62,373	49,974 57,471 62,468
15	50,050 57,557 62,562	50,126 57,644 62,657	59,202 57,732 62,752	50,277 57,819 62,847	50,353 57,906 62,941	50,429 57,994 63,037	50,505 58,081 63,131	50,581 58,168 63,226	50,657 58,256 63,321	50,732 58,342 63,416	50,808 58,429 63,510	50,884 58,517 63,606
16	50,960 58,604 63,700	51,036 58,691 63,794	51,112 58,779 63,890	51,187 58,866 63,984	51,263 58,952 64,079	51,339 59,040 64,174	51,415 59,127 64,269	51,491 59,214 64,363	51,567 59,302 64,459	51,642 59,389 64,553	51,718 59,476 64,648	51,794 59,564 64,743
17	51,870 59,650 64,837	51,946 59,737 64,932	52,022 59,825 65,027	52,097 59,912 65,122	52,173 59,999 65,216	52,249 60,087 65,312	52,325 60,174 65,406	52,401 60,261 65,501	52,477 60,349 65,596	52,552 60,435 65,691	52,628 60,522 65,785	52,704 60,610 65,881
18	52,780 60,697 65,975											

*A set of tandem axles with spacing between axles of less than 3.5' is considered as a single axle.

PLATE 25-5

PURPLE AND BONUS OVERLOADS*

Example: 8'-0" First to Last Axle in Feet

50,400	4 tires, 8'-0" Wide	Purple Load = 1.5 x 700 (L + 40)
57,960	8 tires, 8'-0" Wide	Purple Load (+15%) = 1.15 x 1.5 x 700 (L + 40)
63,000	8 tires, 10'-0" Wide	Purple Load (+25%) = 1.25 x 1.5 x 700 (L + 40)

FT. \ IN.	0	1	2	3	4	5	6	7	8	9	10	11
2	28,000 32,200 35,000	28,000 32,200 35,000	28,000 32,200 35,000	28,000 32,200 35,000	28,000 32,200 35,000	28,000 32,200 35,000	28,000 32,200 35,000	28,000 32,200 35,000	28,000 32,200 35,000	28,000 32,200 35,000	28,000 32,200 35,000	28,000 32,200 35,000
3	28,000 32,200 35,000	28,000 32,200 35,000	28,000 32,200 35,000	28,000 32,200 35,000	28,000 32,200 35,000	28,000 32,200 35,000	45,675 52,526 57,094	45,762 52,626 57,203	45,850 52,728 57,313	45,937 52,828 57,422	46,025 52,928 57,531	46,113 53,030 57,641
4	46,200 53,130 57,750	46,287 53,230 57,859	46,375 53,332 57,969	46,462 53,432 58,078	46,550 53,532 58,187	46,638 53,634 58,297	46,725 53,734 58,406	46,812 53,834 58,515	46,900 53,935 58,625	46,987 54,036 58,734	47,075 54,136 58,843	47,163 54,237 58,954
5	47,250 54,338 59,062	47,337 54,438 59,171	47,425 54,539 59,282	47,512 54,639 59,391	47,600 54,740 59,500	47,688 54,841 59,610	47,775 54,942 59,719	47,862 55,041 59,828	47,950 55,143 59,938	48,037 55,243 60,047	48,125 55,343 60,156	48,213 55,445 60,266
6	48,300 55,545 60,375	48,387 55,645 60,484	48,475 55,747 60,594	48,562 55,847 60,703	48,650 55,947 60,812	48,738 56,049 60,922	48,825 56,149 61,031	48,912 56,249 61,140	49,000 56,350 61,250	49,087 56,451 61,359	49,175 56,551 61,468	49,263 56,652 61,579
7	49,350 56,752 61,687	49,437 56,853 61,798	49,525 56,954 61,907	49,612 57,054 62,016	49,700 57,155 62,125	49,788 57,256 62,235	49,875 57,356 62,344	49,962 57,458 62,453	50,050 57,558 62,563	50,137 57,658 62,672	50,225 57,758 62,781	50,313 57,860 62,891
8	50,400 57,960 63,000	50,487 58,060 63,109	50,575 58,162 63,219	50,662 58,262 63,328	50,750 58,362 63,437	50,838 58,464 63,547	50,925 58,564 63,656	51,012 58,664 63,765	51,100 58,765 63,875	51,187 58,866 63,984	51,275 58,966 64,093	51,363 59,067 64,204
9	51,450 59,168 64,312	51,537 59,268 64,421	51,625 59,369 64,532	51,712 59,469 64,641	51,800 59,570 64,750	51,888 59,671 64,860	51,975 59,771 64,969	52,062 59,871 65,078	52,150 59,973 65,188	52,238 60,073 65,297	52,325 60,173 65,406	52,413 60,275 65,516
10	52,500 60,375 65,625	52,587 60,475 65,734	52,675 60,577 65,844	52,762 60,677 65,953	52,850 60,777 66,062	52,938 60,879 66,172	53,025 60,979 66,281	53,112 61,079 66,390	53,200 61,180 66,500	53,288 61,281 66,609	53,375 61,381 66,718	53,463 61,482 66,829
11	53,550 61,583 66,938	53,637 61,683 67,046	53,725 61,784 67,157	53,812 61,884 67,266	53,900 61,985 67,375	53,988 62,086 67,485	54,075 62,186 67,594	54,162 62,286 67,703	54,250 62,388 67,813	54,338 62,488 67,922	54,425 62,588 68,031	54,513 62,690 68,141
12	54,600 62,790 68,250	54,687 62,890 68,359	54,775 62,992 68,469	54,862 63,092 68,578	54,950 63,192 68,687	55,038 63,294 68,797	55,125 63,394 68,906	55,212 63,494 69,015	55,300 63,595 69,125	55,388 63,696 69,234	55,475 63,796 69,343	55,563 63,897 69,454
13	55,650 63,998 69,562	55,737 64,098 69,671	55,825 64,199 69,782	55,912 64,299 69,891	56,000 64,400 70,000	56,088 64,501 70,110	56,175 64,601 70,219	56,262 64,701 70,328	56,350 64,803 70,438	56,438 64,903 70,547	56,525 65,003 70,656	56,613 65,105 70,766
14	56,700 65,205 70,875	56,787 65,305 70,984	56,875 65,407 71,094	56,962 65,507 71,203	57,050 65,607 71,312	57,138 65,709 71,422	57,225 65,809 71,531	57,312 65,909 71,640	57,400 66,010 71,750	57,488 66,111 71,859	57,575 66,211 71,968	57,663 66,312 72,079
15	57,750 66,412 72,188	57,837 66,513 72,296	57,925 66,614 72,407	58,012 66,714 72,516	58,100 66,815 72,625	58,188 66,916 72,735	58,275 67,016 72,844	58,362 67,116 72,953	58,450 67,218 73,063	58,538 67,318 73,172	58,625 67,418 73,281	58,713 67,520 73,391
16	58,800 67,620 73,500	58,887 67,720 73,609	58,975 67,822 73,719	59,062 67,922 73,828	59,150 68,022 73,937	59,238 68,124 74,047	59,325 68,224 74,156	59,412 68,324 74,265	59,500 68,425 74,375	59,588 68,526 74,484	59,675 68,626 74,593	59,763 68,727 74,704
17	59,850 68,828 74,812	59,937 68,928 74,921	60,025 69,029 75,032	60,112 69,129 75,141	60,200 69,230 75,250	60,288 69,331 75,360	60,375 69,431 75,469	60,462 69,531 75,578	60,550 69,633 75,688	60,638 69,733 75,797	60,725 69,833 75,906	60,813 69,935 76,016
18	60,900 70,035 76,125											

PILOT CAR/OVERHANG COMPARISON

1. Legal per CVC 35410

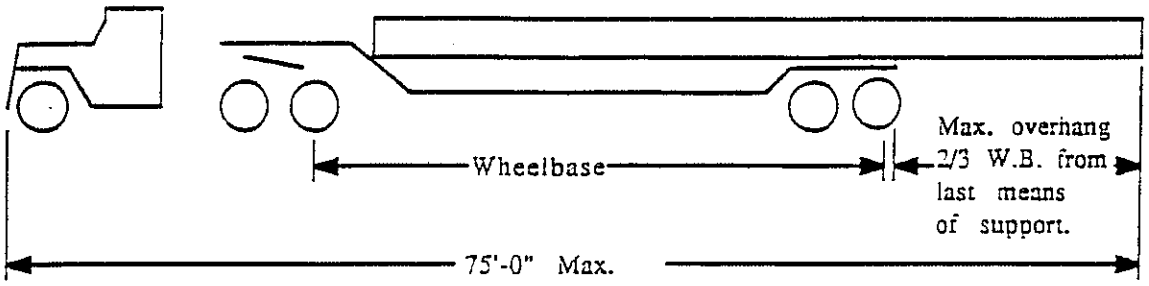

2. Legal per CVC 35414

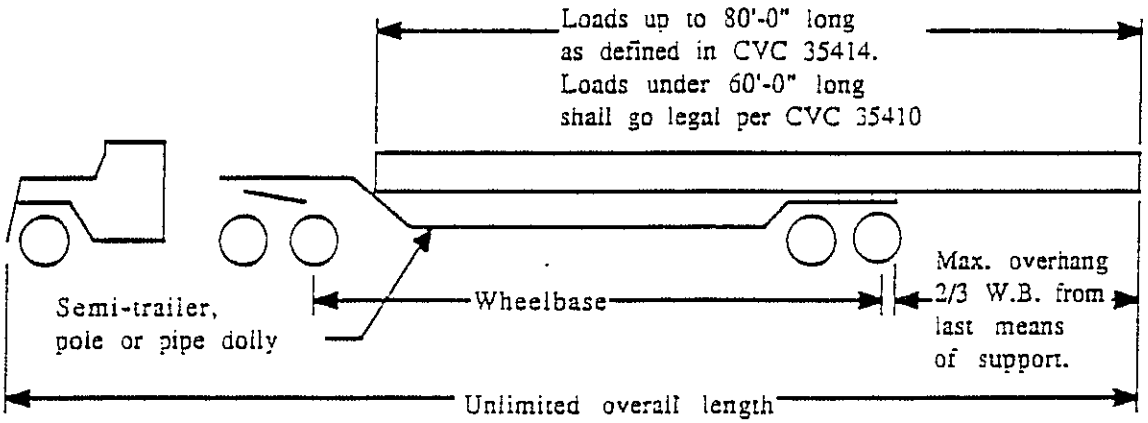

Note: Vehicle combination, when unladen, shall return at legal demensions! No permits are available when unladen!

3. Single item non reducible permit load

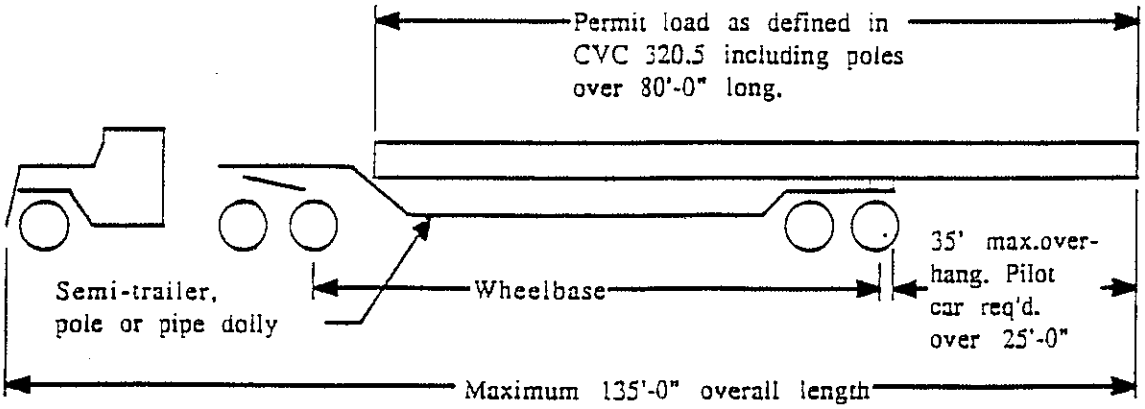

PILOT CAR/OVERHANG COMPARISON

1. Clear Vision

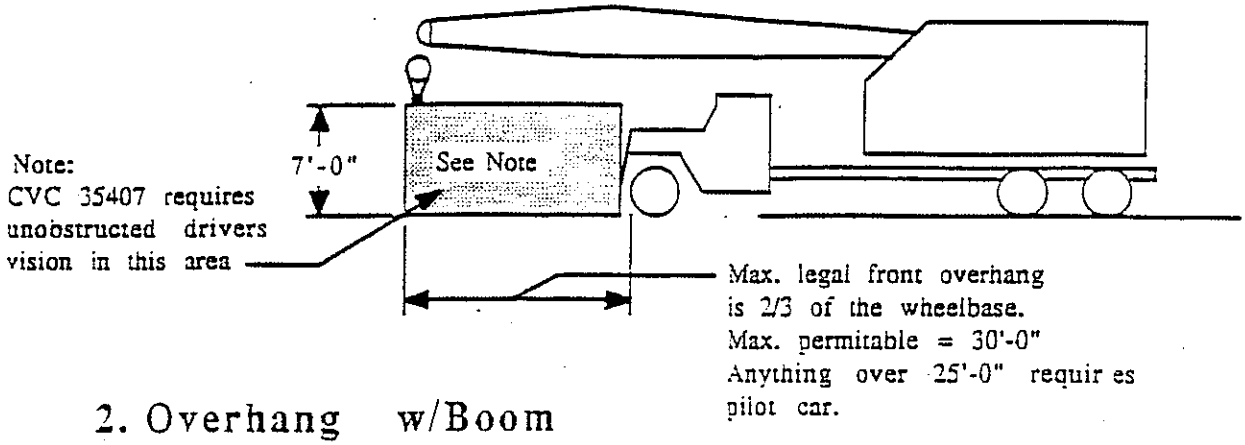

2. Overhang w/Boom Trailer

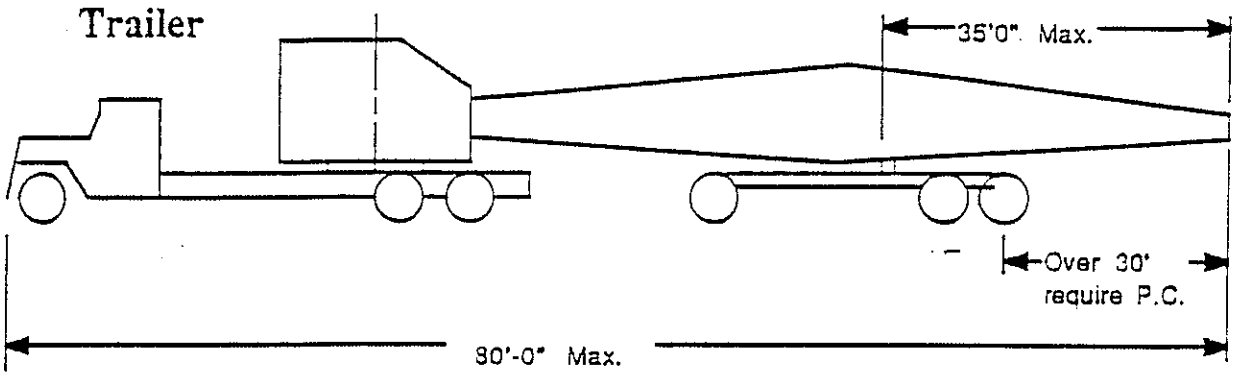

3. Overhang w/Dolly

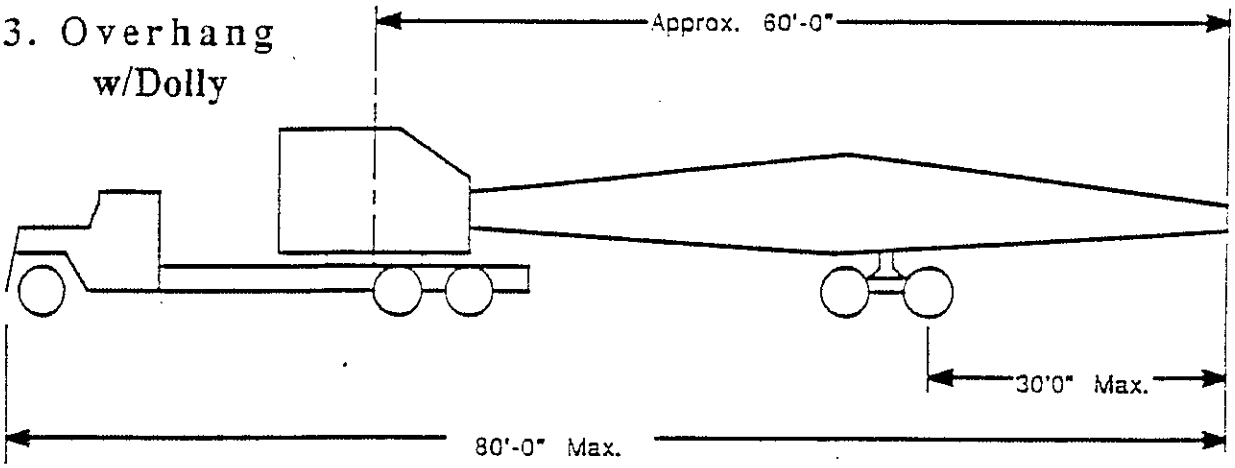

4. Rear Overhang

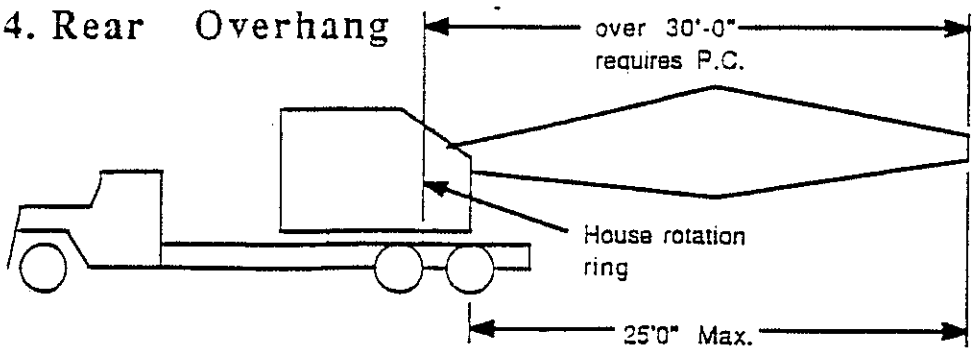

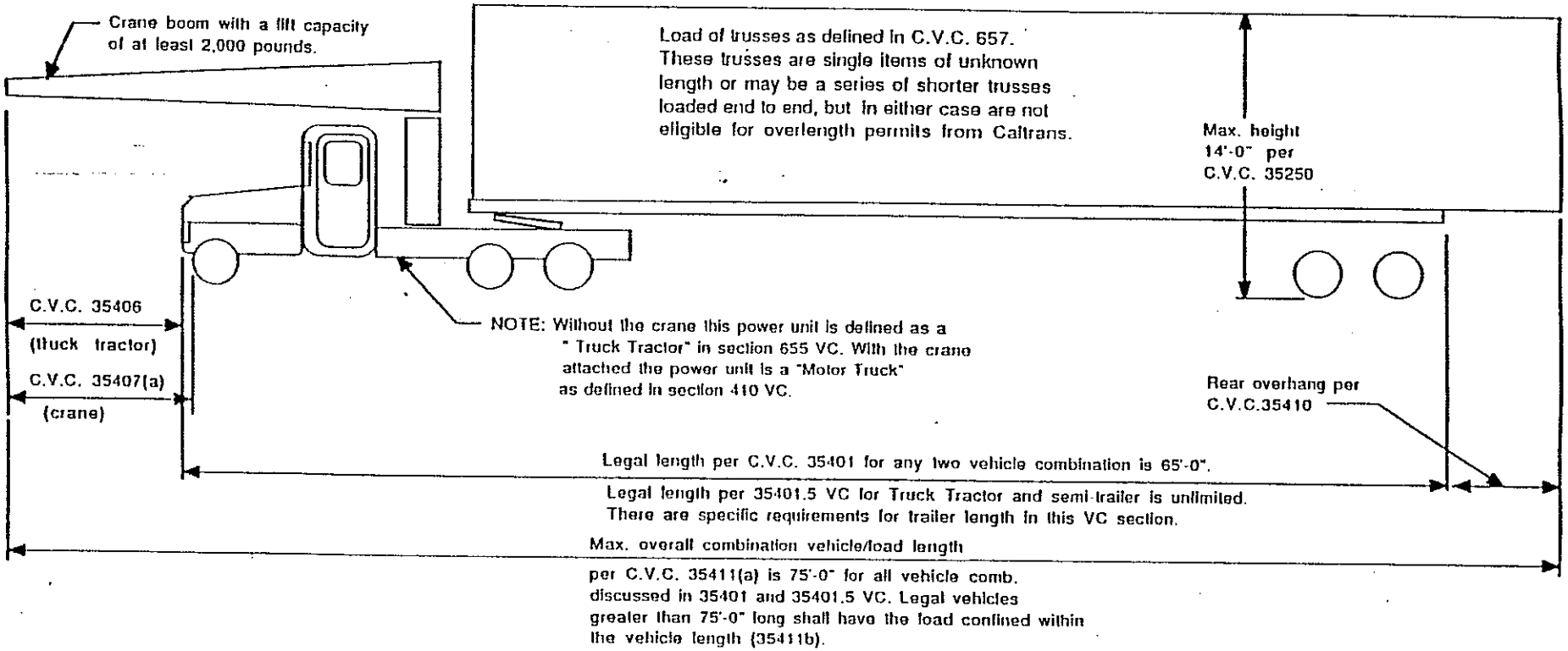

QUESTIONS:

1. Are trusses a comodity in C.V.C.35414 that would exempt a tractor/semi-trailer from the length limtations of C.V.C. 35401 and 35401.5?
2. If they are not exempt, then what is the length limitations for the tractor/semi trailer under C.V.C. 35401 and/or 35401.5?
3. If they are not exempt, then what is the rear overhang limitation under C.V.C. 35410?
4. If the power unit is registered with DMV as a truck tractor, what is the max. front overhang allowed?
5. If the power unit is registered with DMV as a truck tractor, what is the max. overall length including front overhang, tractor, semi-trailer and load?
6. If the power unit is registered with DMV as a crane, what is the max. front overhang?
7. If the power unit is registered with DMV as a crane, what is the max. overall length including front overhang, power unit, semi-trailer and load?
8. These same questions would be applicable if the answer to question number 1 is " yes".

CITY OF SANTEE

DESIGNATED TRUCK ROUTES
PER CITY ORDINANCE NO. 365

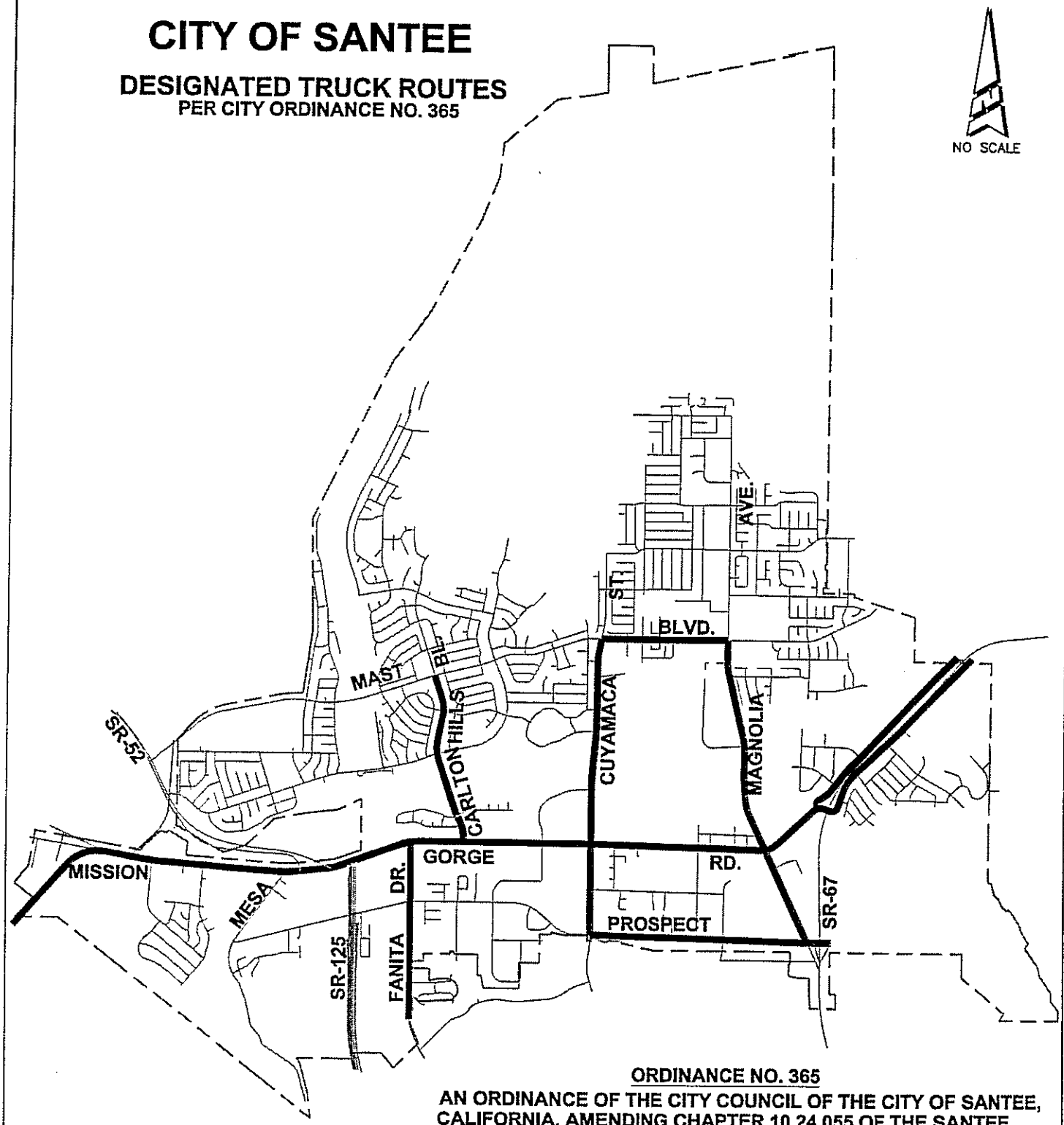

ORDINANCE NO. 365

AN ORDINANCE OF THE CITY COUNCIL OF THE CITY OF SANTEE, CALIFORNIA, AMENDING CHAPTER 10.24.055 OF THE SANTEE MUNICIPAL CODE RELATING TO THE REGULATION OF TRUCK TRAFFIC ON CITY STREETS.

LEGEND:

- TRUCK ROUTE

g:\apps\dwgs\traffic\Truckmap.dwg 3/4/99